LA LUCE
LIGHT – DESIGN – MORE

LINEAR WALL WASHER

Item Code: LL-WW-500-07

Image:

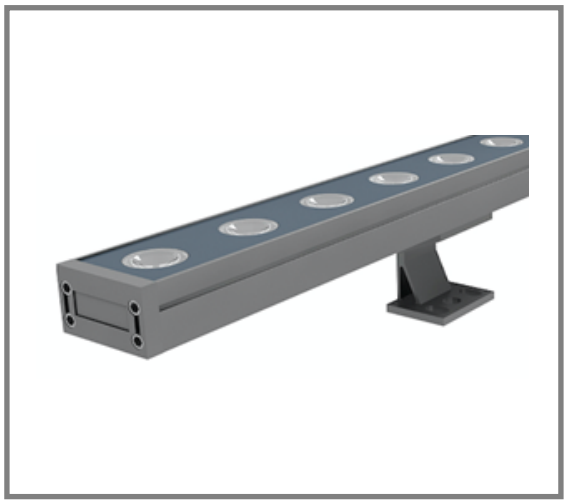

Dimension:

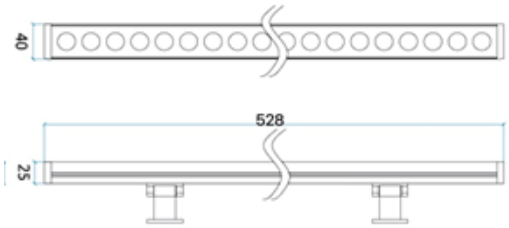

Technical data	
Type	Linear Light
Installation position	Surface mounted
Installation environment	Outdoor
LED Chip	High Power SMDs
Beam Angle	Flood Optic
Light distribution	Symmetric
Power	7W LED
Source lumens	650Lm
Frequency	50 - 60 Hz
CCT / Tone	2700K / 3000K / 4000K
Colour rendering index	80 Ra
AC / DC	AC 220V
Energy class	A++
Safety class	II
IP	IP65
Glow wire test	850°
Direct mounting on normally flammable surfaces	Yes
Operating temperature	-30°C / +55°C
Driver included	Remote driver required

Finishing casing	
Material	Die cast aluminium housing, and end cap, adjustable mounting brackets and external stainless steel screws
Colour	White / Black / Gray
Processing	Powder coating

Finishing diffuser	
Material	Clear safety glass
Colour	Transparent
Accesories	Anti glare louver (avaialable seoerately)

Photometric

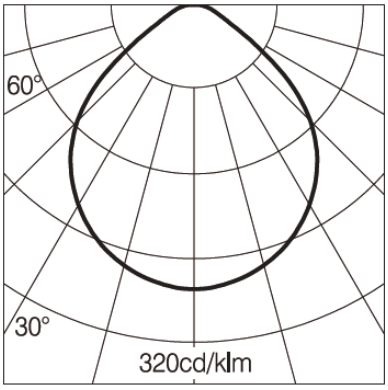

IP68 Male Female
water proof connector

50000h WARRANTY 5 YEARS CE RoHS IP65

100W Single Output Switching Power Supply

LPV-100 series

■ Features :

- Constant voltage design
- Universal AC input / Full range
- Fully encapsulated with IP67 level (Note.8)
- Withstand 300VAC surge input for 5 seconds
- Protections: Short circuit / Overload / Over voltage
- Fully isolated plastic case
- Cooling by free air convection
- 100% full load burn-in test
- Low cost, high reliability
- Suitable for LED related fixture or appliance (such as LED Decoration or Advertisement devices)(Note 7.)

IS 15885(Part 2/Sec13) R-41027766 (for 12V,24V only) IP67

SPECIFICATION

MODEL		LPV-100-5	LPV-100-12	LPV-100-15	LPV-100-24	LPV-100-36	LPV-100-48
OUTPUT	DC VOLTAGE	5V	12V	15V	24V	36V	48V
	RATED CURRENT	12A	8.5A	6.7A	4.2A	2.8A	2.1A
	CURRENT RANGE	0 ~ 12A	0 ~ 8.5A	0 ~ 6.7A	0 ~ 4.2A	0 ~ 2.8A	0 ~ 2.1A
	RATED POWER	60W	102W	100.5W	100.8W	100.8W	100.8W
	RIPPLE & NOISE (max.) Note.2	80mVp-p	120mVp-p	120mVp-p	150mVp-p	150mVp-p	150mVp-p
	VOLTAGE TOLERANCE Note.3	±8.0%	±5.0%				
	LINE REGULATION	±1.0%					
	LOAD REGULATION	±6.0%	±2.0%				
	SETUP, RISE TIME Note.6	2000ms, 25ms / 230VAC 2000ms, 25ms / 115VAC					
	HOLD UP TIME (Typ.)	50ms/230VAC 14ms/115VAC at full load					
INPUT	VOLTAGE RANGE Note.4	90 ~ 264VAC 127 ~ 370VDC					
	FREQUENCY RANGE	47 ~ 63Hz					
	EFFICIENCY (Typ.)	80%	85%	87%	88%	88%	89%
	AC CURRENT	2.2A/115VAC 1.2A/230VAC					
	INRUSH CURRENT(Typ.)	COLD START 75A(twidth=700μs measured at 50% Ipeak) at 230VAC					
	MAX. No. of PSUs on 16A CIRCUIT BREAKER	2 units (circuit breaker of type B) / 3 units (circuit breaker of type C) at 230VAC					
	LEAKAGE CURRENT	0.25mA / 240VAC					
PROTECTION	OVERLOAD	110 ~ 150% rated output power					
		Protection type : Hiccup mode, recovers automatically after fault condition is removed					
	OVER VOLTAGE	5.75 ~ 6.75V	13.8 ~ 16.2V	17.25 ~ 20.25V	27.6 ~ 32.4V	41.4 ~ 48.6V	55.2 ~ 64.8V
		Protection type : Shut down o/p voltage, re-power on to recover					
ENVIRONMENT	WORKING TEMP.	-25 ~ +70℃ (Refer to "Derating Curve")					
	WORKING HUMIDITY	20 ~ 90% RH non-condensing					
	STORAGE TEMP., HUMIDITY	-40 ~ +80℃, 10 ~ 95% RH					
	TEMP. COEFFICIENT	±0.03%/℃ (0 ~ 50℃)					
	VIBRATION	10 ~ 500Hz, 2G 10min./1cycle, period for 60min. each along X, Y, Z axes					
SAFETY & EMC	SAFETY STANDARDS	UL8750,CSA C22.2 No 250.13-12,UL879,CSA C22.2 No.207-M89,BIS IS15885(for LPV-100-12,LPV-100-24 only), EAC TP TC 004,IP67; IEC/EN 62368-1 approved.					
	WITHSTAND VOLTAGE	I/P-O/P:3KVAC					
	ISOLATION RESISTANCE	I/P-O/P:>100M Ohms / 500VDC / 25℃/ 70% RH					
	EMC EMISSION	Compliance to EN55032 (CISPR32) Class B, EN61000-3-2 Class A(≤80% load), EN61000-3-3, EAC TP TC 020					
	EMC IMMUNITY	Compliance to EN61000-4-2,3,4,5,6,8,11; EN55024, light industry level, criteria A, EAC TP TC 020					
OTHERS	MTBF	703Khrs min. MIL-HDBK-217F (25℃)					
	DIMENSION	190*52*37mm (L*W*H)					
	PACKING	0.63Kg;20pcs/13.6Kg/0.55CUFT					

NOTE

1. All parameters NOT specially mentioned are measured at 230VAC input, rated load and 25℃ of ambient temperature.
2. Ripple & noise are measured at 20MHz of bandwidth by using a 12" twisted pair-wire terminated with a 0.1uf & 47uf parallel capacitor.
3. Tolerance : includes set up tolerance, line regulation and load regulation.
4. Derating may be needed under low input voltage. Please check the static characteristics for more details.
5. The power supply is considered as a component that will be operated in combination with final equipment. Since EMC performance will be affected by the complete installation, the final equipment manufacturers must re-qualify EMC Directive on the complete installation again.
6. Length of set up time is measured at first cold start. Turning ON/OFF the power supply may lead to increase of the set up time.
7. Suitable for indoor use or outdoor use without direct sunlight exposure.
8. The ambient temperature derating of 3.5℃/1000m with fanless models and of 5℃/1000m with fan models for operating altitude higher than 2000m(6500ft).
9. Products sourced from the Americas regions may not have the TUV/BIS/CCC logo. Please contact your MEAN WELL sales for more information.
10. For any application note and IP water proof function installation caution, please refer our user manual before using. https://www.meanwell.com/Upload/PDF/LED_EN.pdf
11. This product is not intended for LED applications in the EU.(In the EU NPF/LPF/XLG series are recommended.)
12. To fulfill requirements of latest ErP regulation for lighting luminaires, this LED Driver can only be used behind a switch without permanently connected to mains.

■ Mechanical Specification

Case No. LPC-100A Unit:mm

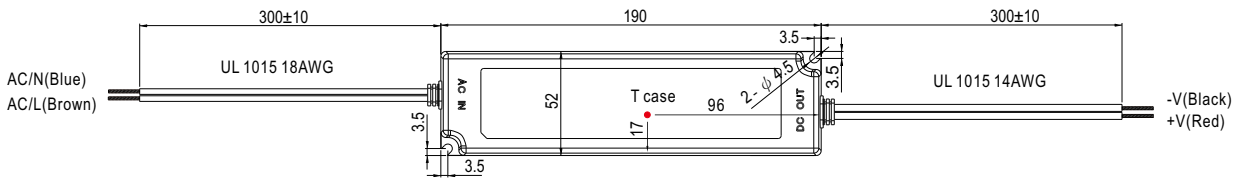

※ T case: Max. Case Temperature.

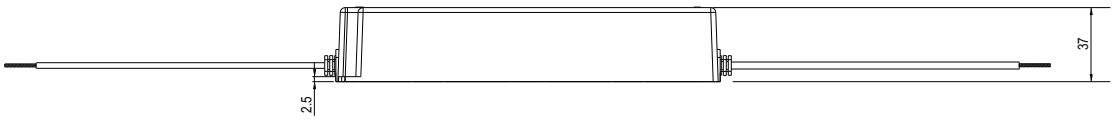

■ Recommend Mounting Direction

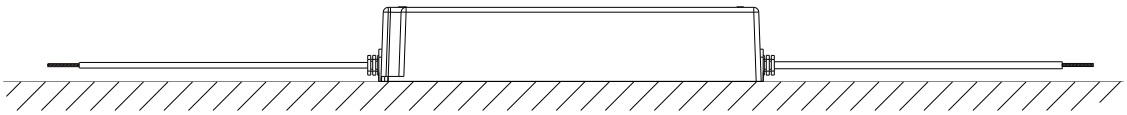

■ Block Diagram

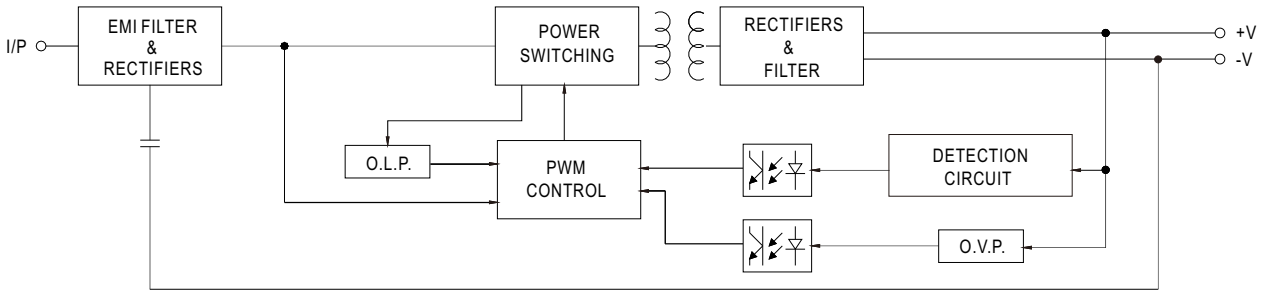

■ Derating Curve

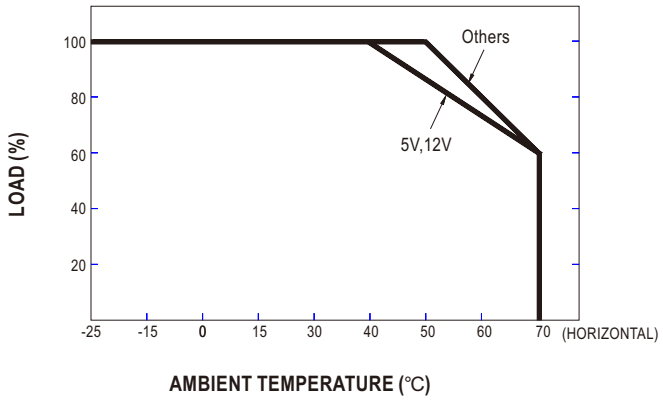
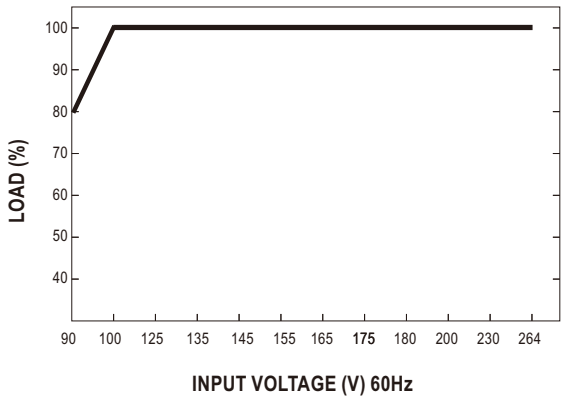
■ Static Characteristics